EB35003

3.5"SubCompact Board
Onboard Intel 2nd/3rd Generation Core I7/I5/I3 Procrssor

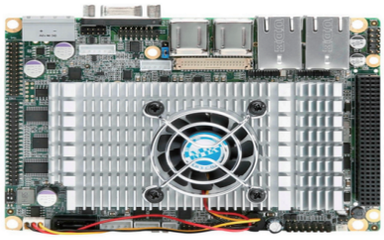

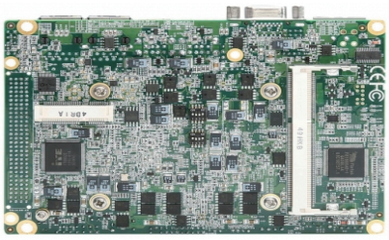

FEATURES

- Onboard Intel 2nd/3rd Generation Core I7/I5/I3 Procrssor
- SATA x1 ; mSATAx1 (Or PCIe x 1)
- RS-232 x 4,RS-485 x 1,RS-422/485 x 1
- USB x6
- 204Pin DDR3 1066MHz SO-DIMM x1 Max. 4GB
- Support 16 bit DIO
- 10/100/1000 Base,RJ45 x 2

Specifications

SYSTEM	
Processor	Onboard Intel 2nd/3rd Generation Core I7/I5/I3 Procrssor
Chipset	Intel BD82HM55
System Memory	204Pin DDR3 1066MHz SO-DIMM x1 Max. 4GB
BIOS	32Mb AMI SPI
WatchDog Timer	256 Levels
Power Supply Type	AT/ ATX
Power Requirement	DC-IN 12V
MTBF(Hours)	-
Certification	CE/FCC
DISPLAY	
VGA/LCD Controller	-
Video Output	VGA, LVDS
Memory	-
MULTI I/O	
Ethernet	10/100/1000Base, RJ 45 x2
Audio	High Definition Audio Interface
USB Port	USB x 6
Serial Port	RS-232 x 4 , RS-485 x 1 , RS-422/485 x 1
Storage Interface	SATA x 1 mSATA x 1(Or PCIe x 1)
VGA	x1
LVDS	x1
HDMI	-
Expansion Slot	PCI-104 x 1
DIO	16 Bit GPIO
Power	Power Input x 1
Others	PS/2 KB&MS x 1 LPT x 1

MECHANICAL AND ENVIRONMENTAL	
Dimensions	146mm x 102mm (5.75" x 4.02")
Operating Temperature	-20℃ ~ 60℃ (-4℉ ~ 140℉)
Storage Temperature	-40℃ ~ 80℃ (-40℉ ~ 176℉)
Relative Humidity	5% ~ 95% Relative Humidity, Non-condensing

DIMENSION (Unit: mm)

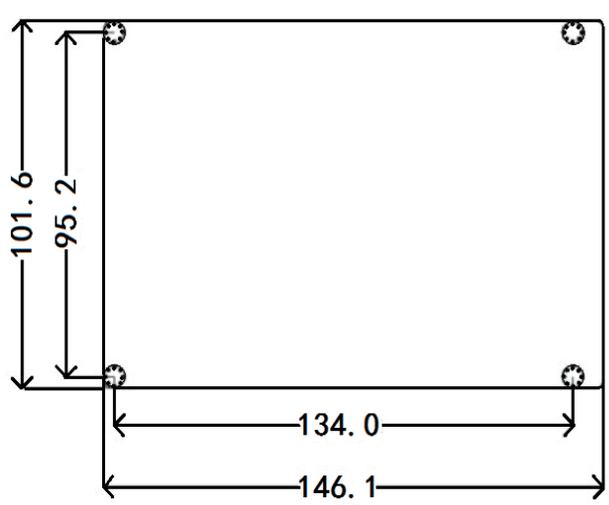

Note: All specifications are subject to change without notice